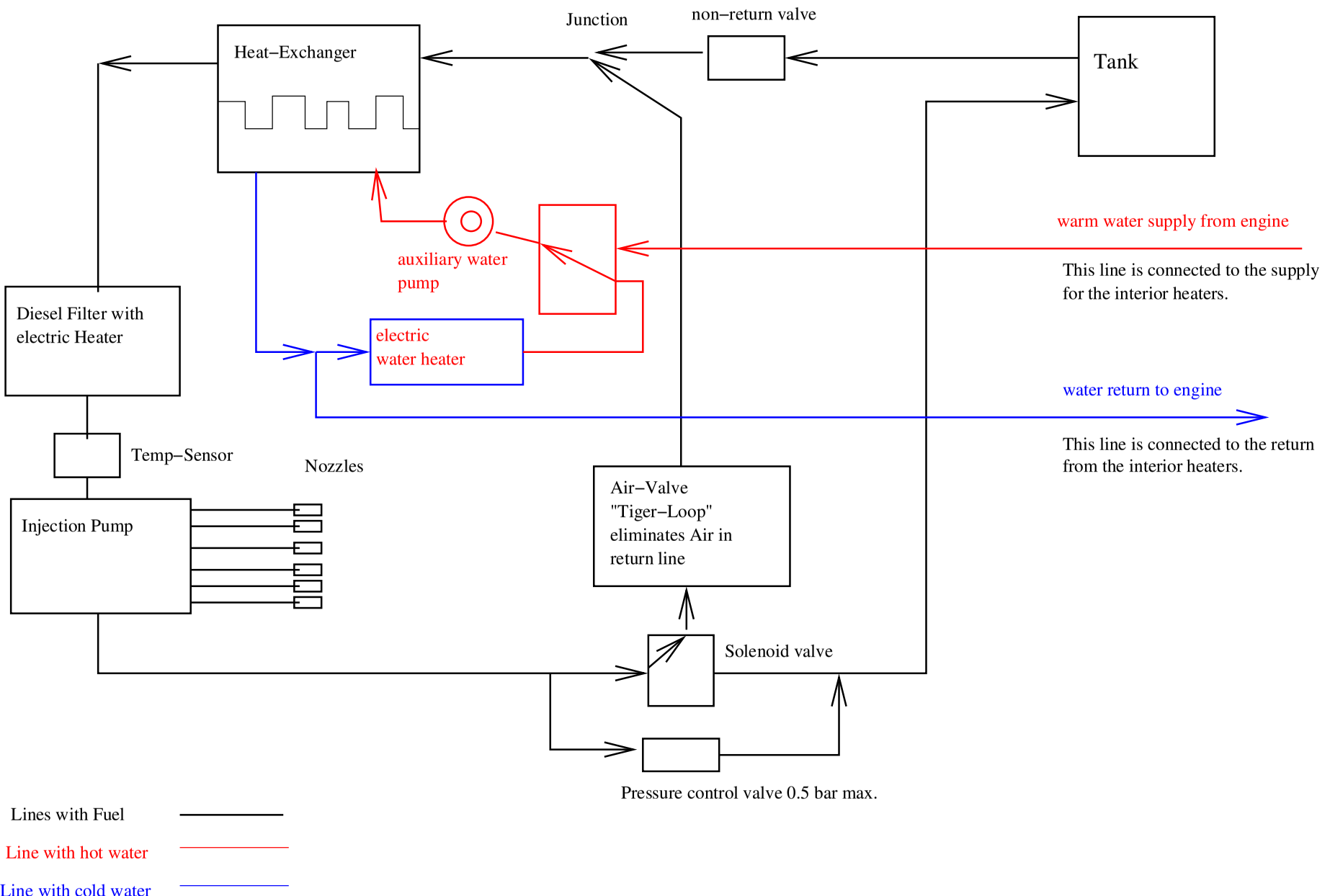Concept for modification of a BMW 525TDS with engine M51